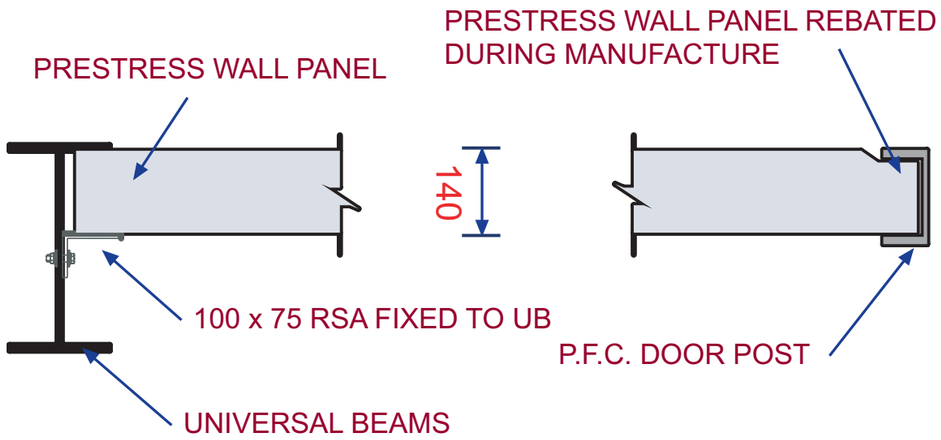

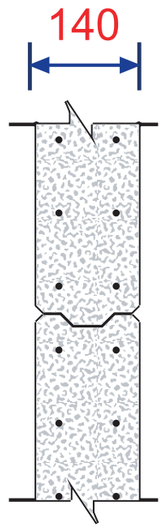
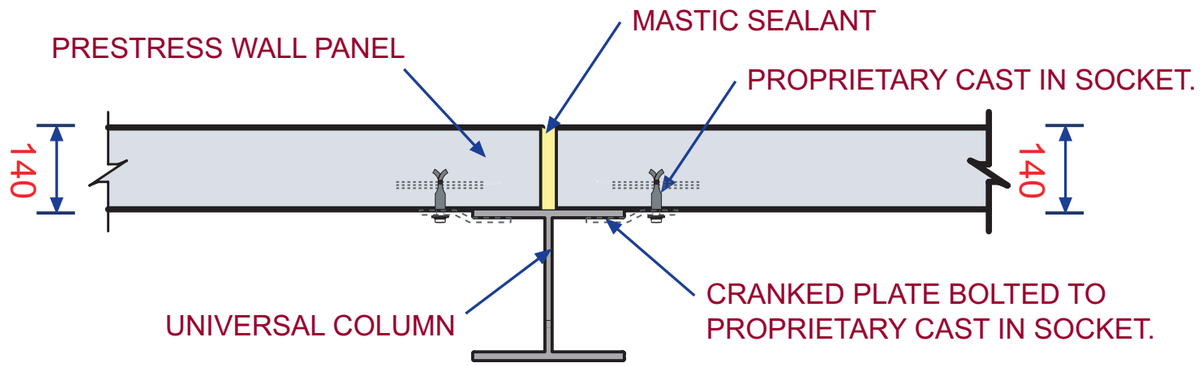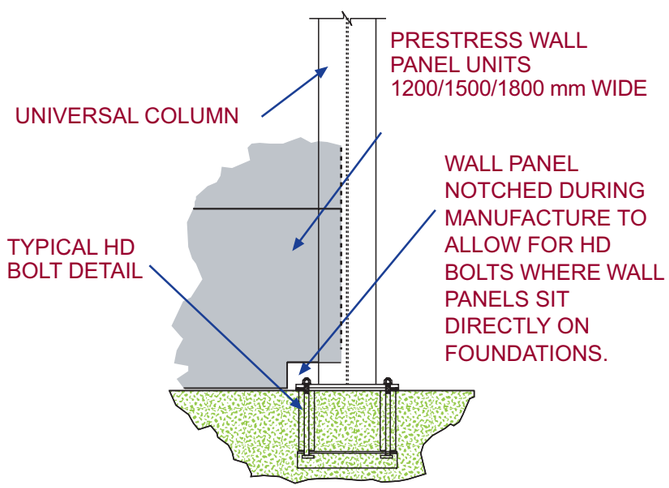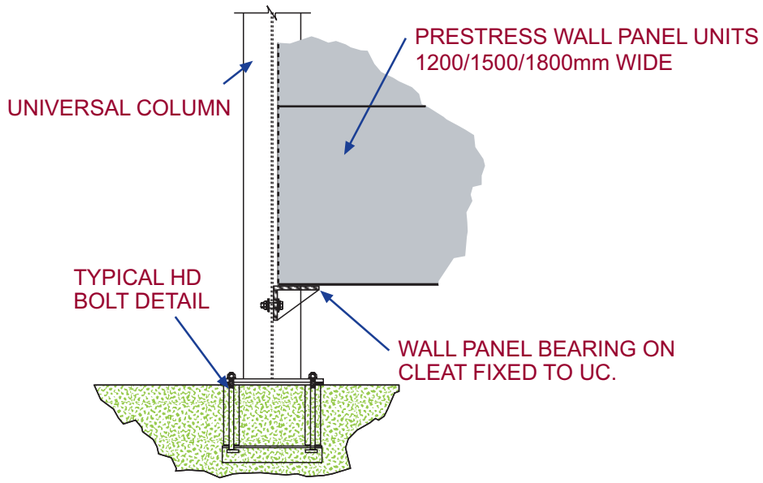
TYPICAL WALL
JOINT DETAIL